Springstarter

Easy Diesel Hand Starting With Kineteco Spring Starters

Simms SMS Series "Stubby" Spring Starter Specifications

Description	Short, steel bodied Spring Starter with spiral Powerspring wound by a detachable handle, set and tripped by hand.
Rotation of starter	Clockwise viewed on the pinion
Engine capacity	Max. 6 cylinders, up to 1 litre per cylinder
Torque (Range)	36Nm
No. of output turns	7.5 maximum
Output energy	Nom. 950 Joules
Cold Starting	To 0°C, some engines require starting aids at lower temperatures.
Maximum winding load	23 Nm Torque
To wind fully	18 turns of the handle
Mounting flange types	SAE 1, SAE2/3, SAE 4/5, Ford
Pinions	10/12, 8/10, 6/8 Fellows stub Metric Module 2.5,3
Cord pull / winding handle position	Variable in 8.5° increments
Weight	15Kgs
Shipping dimensions	33 x 20 x 20 cms
Standard equipment	Winding handle and handbook
Options - Details as above with the following variations	
Reverse rotation model	SMR
Overhung pinion	SMNS, SMNR subject to availability
Lightweight Model	Special order

Kineteco International Ltd., Unit 16 Willesborough Industrial Park, Ashford, Kent, UK, TN24 0TD.
Phone: +44 (0)1233 811500 | Fax: +44 (0)1233 221571
Website: www.springstarter.com | Email: sales@springstarter.com

Kineteco International acts as agent for its parent company Pentham Powerspring Ltd; Registered in England No: 3394741, Registered address as above.

Springstarter

Easy Diesel Hand Starting With Kineteco Spring Starters

Simms SMS Series “Stubby” Spring Starter Typical Dimensions

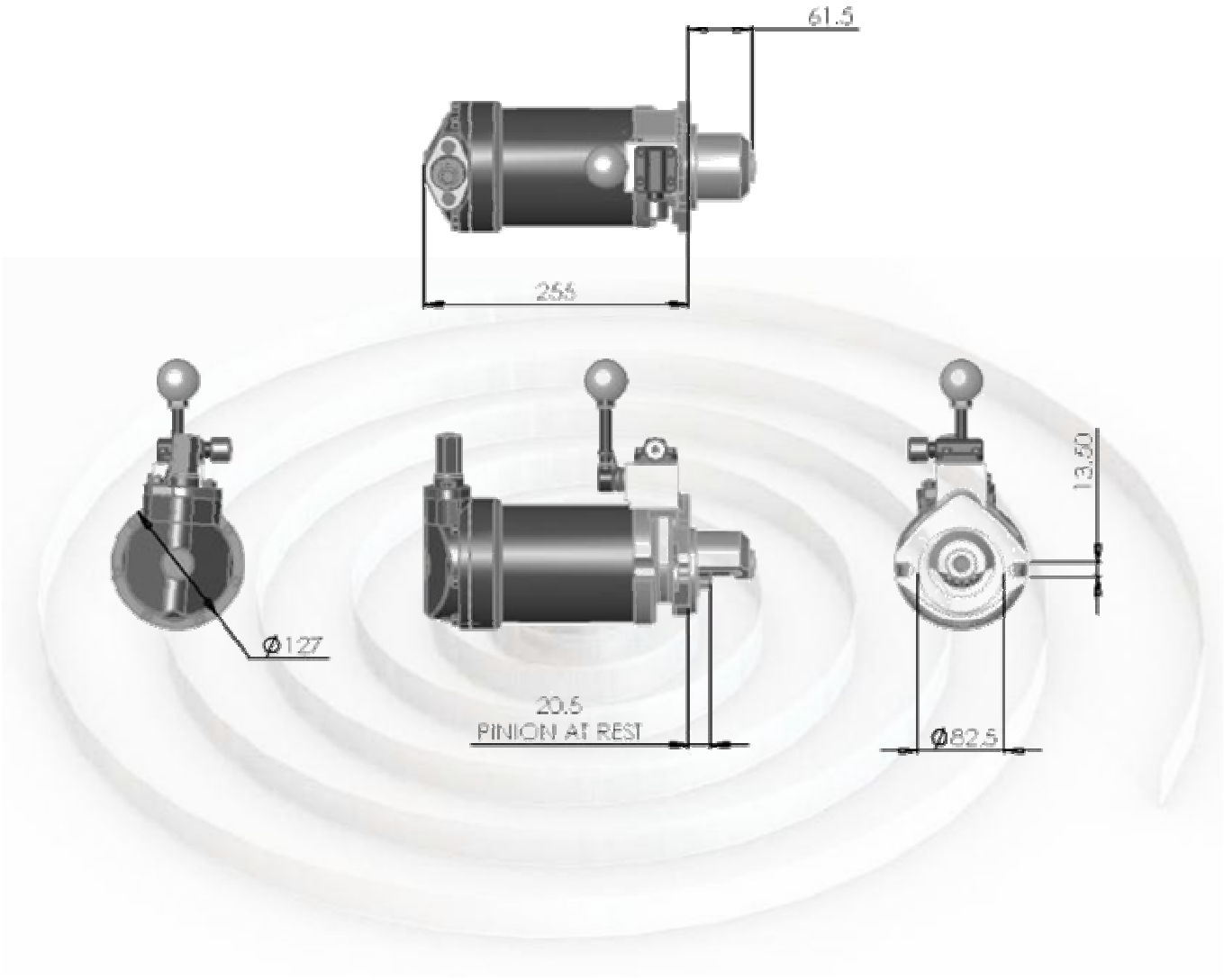

Kineteco International Ltd., Unit 16 Willesborough Industrial Park, Ashford, Kent, UK, TN24 0TD.
Phone: +44 (0)1233 811500 | Fax: +44 (0)1233 221571
Website: www.springstarter.com | Email: sales@springstarter.com

Kineteco International acts as agent for its parent company Pentham Powerspring Ltd; Registered in England No: 3394741, Registered address as above.